LED Microsensor NT

Mid-Infrared (MIR) Photodiode

2.8 - 4.7 µm

Lms43PD-05-TEM-R

Device parameters	Symbol	Value	Units
Sensitive area size	d	0.5	mm
Reverse voltage	V_r	0.1	V
Operating/ storage temperature	T_{opr}/ T_{stg}	+5..+90*	°C
Soldering temperature (can be applied for not more than 5 secs)	T_{sol}	+180	°C

*Photodiode design for different storage/operating temperature range can be considered under request.

All parameters refer to photodiode operation at ambient temperature 25°C unless otherwise stated.

Photodiode parameters	Conditions	Symbol	Value	Units
Cut-off wavelength (at 10% level)[1]	-	λ_{cut}	4.50 - 4.70	µm
Max. sensitivity range (at 80% level)[1]	-	λ_p	3.55 - 4.15	µm
Dark current (typical/ maximal)[2]	V_r = 0.1 V	I_d	typ 4 / max 5	mA
Shunt resistance (minimal/ typical)[2]	V_r = 10 mV	R_{sh}	min 12 / typ 17	Ω
Capacitance (typical/ maximal)[1]	V_r = 10 mV	C	-	pF
Photosensitivity (minimal/ typical)[2]	λ = 4.1 µm	S	min 1 / typ 1.1	A/W
Noise equivalent power (typical/ maximal)[2]	λ = 4.1 µm	NEP	typ $2.8*10^{-11}$ / max $3.7*10^{-11}$	$W/Hz^{1/2}$
Detectivity (minimal/ typical)[2]	λ = 4.1 µm	D*	min $1.1*10^{9}$ / typ $1.5*10^{9}$	$cm \cdot Hz^{1/2} \cdot W^{-1}$

[1] Parameter tested for representative sampling.

[2] Parameter tested for each device.

Typical spectral response

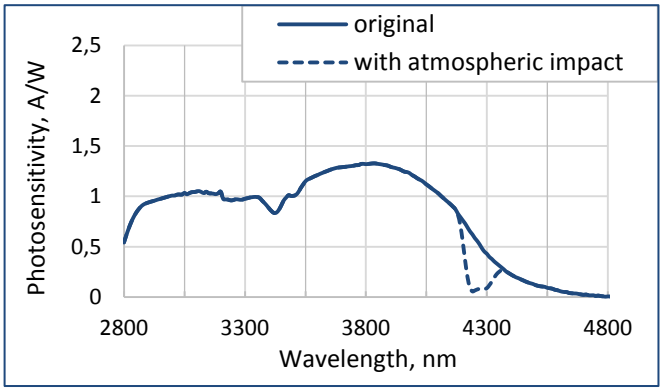

Typical current-voltage characteristic

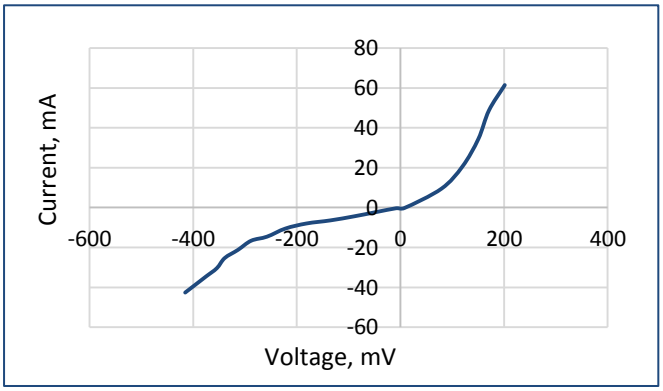

Temperature shift of spectral response

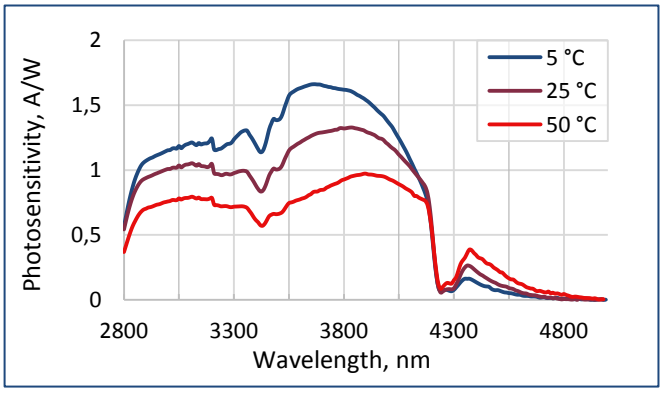

HEAD OFFICE LED Microsensor NT, LLC and RnD CENTRE Microsensor Technology, LLC
10, A, Kurchatova str., 1N, St-Petersburg, 194223, Russia; info@lmsnt.com; www.lmsnt.com

Dark current vs. temperature (Vr = 0.1 V)

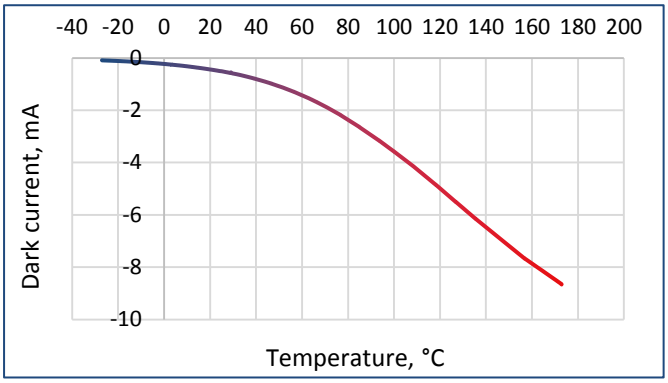

Shunt resistance vs. temperature (Vr = 10 mV)

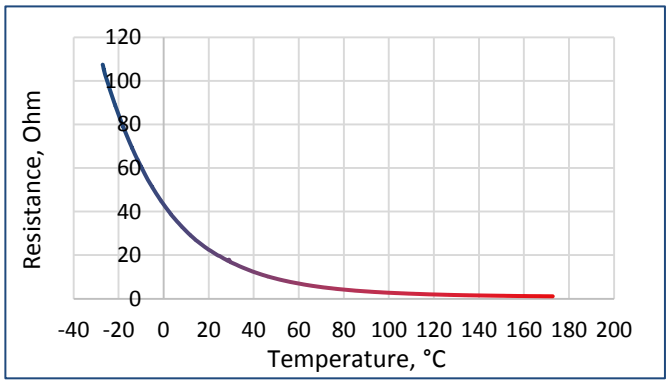

Dark current vs. voltage

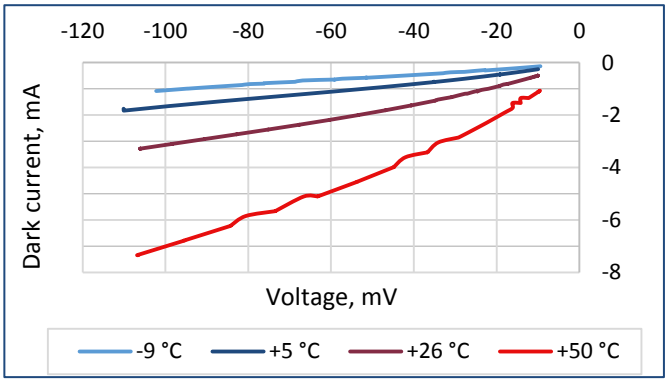

Shunt resistance vs. voltage

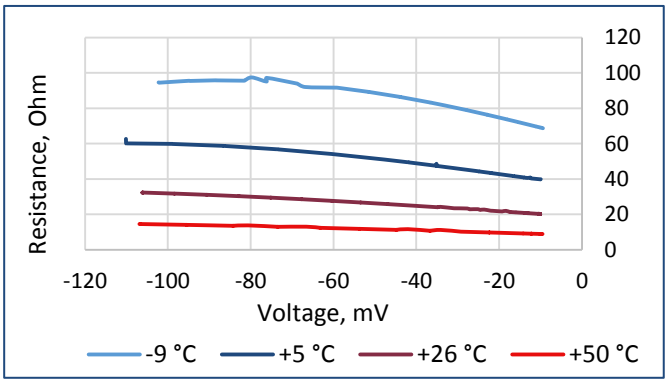

HEAD OFFICE LED Microsensor NT, LLC and RnD CENTRE Microsensor Technology, LLC
10, A, Kurchatova str., 1N, St-Petersburg, 194223, Russia; info@lmsnt.com; www.lmsnt.com

Packages*	Model
TO-18 with a cap without a glass window	Lms43PD-05
TO-18 with a parabolic reflector without a glass window	Lms43PD-05-R
TO-18 with a parabolic reflector with a glass window	Lms43PD-05-RW
TO-5 with a built-in thermocooler and thermoresistor, covered by a cap with a glass window	Lms43PD-05-TEM
TO-5 with a built-in thermocooler and thermoresistor, covered by a parabolic reflector with a glass window	Lms43PD-05-TEM-R
PD with a built-in preamplifier; TO-18 with a parabolic reflector without a window in an aluminum tube	Lms43PD-05-R-PA
PD with a built-in preamplifier; TO-18 with a parabolic reflector with a window in an aluminum tube	Lms43PD-05-RW-PA

*Standard photodiode packaging is non-hermetical, so that condensation during device operation and storage must be prevented.

Recommended modes of PD operation

PD used as a current source (photovoltaic mode)

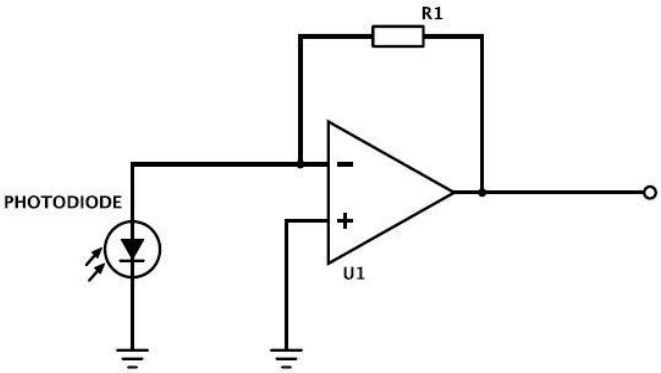

PD used in a photoconductive mode (under reverse bias)

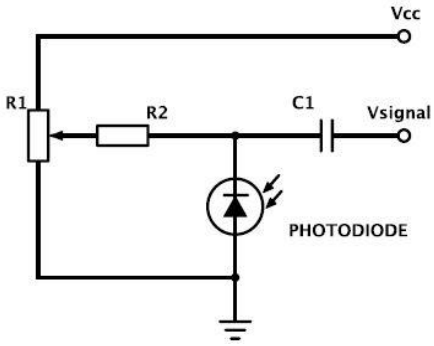

We recommend using **photovoltaic mode**, when PD is used under no reverse bias.
Use photoconductive mode (mode with reverse bias) with caution.

IMPORTANT CAUTIONS:

- please check your connection circuit before turning on the PD;
- please mind the PD polarity: PD anode is marked with a RED dot;
- please do not connect the PD to the multimeter.

Related products:

- **Light emitting diodes (LEDs)** - sources of IR radiation;
- **PAb preamplifier** - amplifies photocurrent generated by a PD and converts it into a voltage signal;
- **SDM synchronous detector** - enables synchronous operation of a PD coupled with a preamplifier and an LED coupled with a driver; performs convertion of an output PD preamplifier signal into DC voltage signal.

HEAD OFFICE LED Microsensor NT, LLC and RnD CENTRE Microsensor Technology, LLC
10, A, Kurchatova str., 1N, St-Petersburg, 194223, Russia; info@lmsnt.com; www.lmsnt.com

Technical Drawings

Lms43PD-05-TEM-R

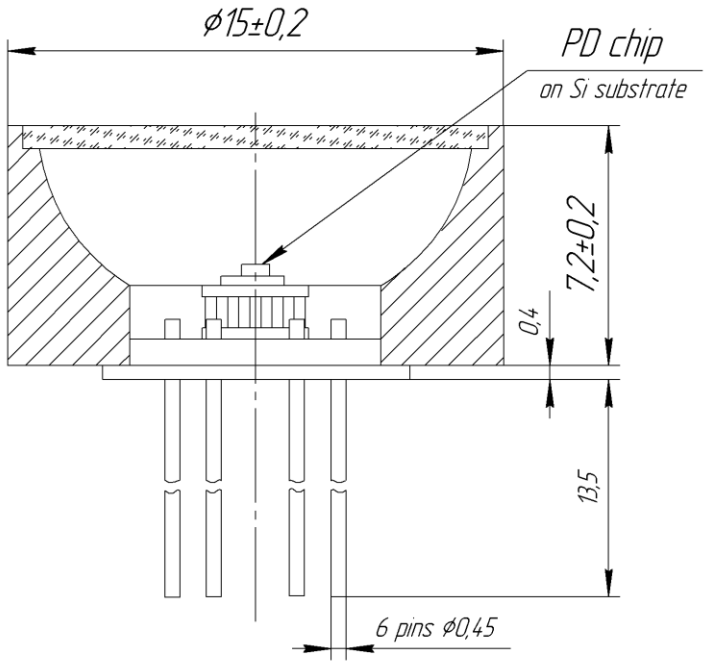

1 – TEC +
2 – PD anode
3 – PD cathode
4 – thermistor
5 – thermistor
6 – TEC –

TOP VIEW

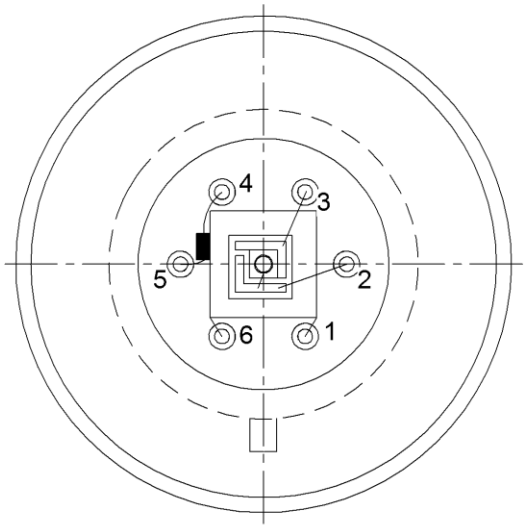

BOTTOM VIEW

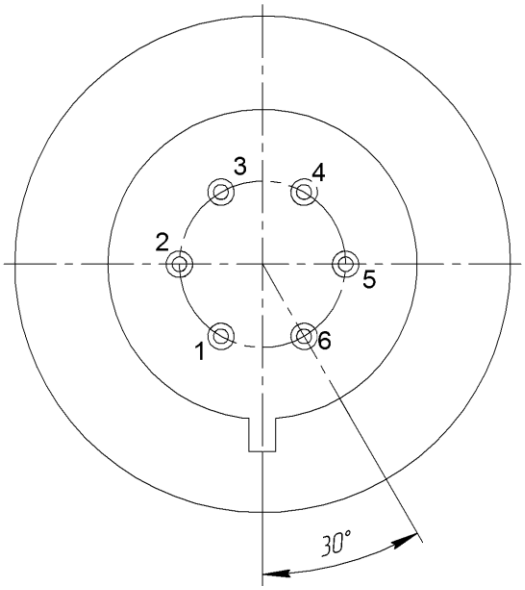

HEAD OFFICE LED Microsensor NT, LLC and RnD CENTRE Microsensor Technology, LLC
10, A, Kurchatova str., 1N, St-Petersburg, 194223, Russia; info@lmsnt.com; www.lmsnt.com