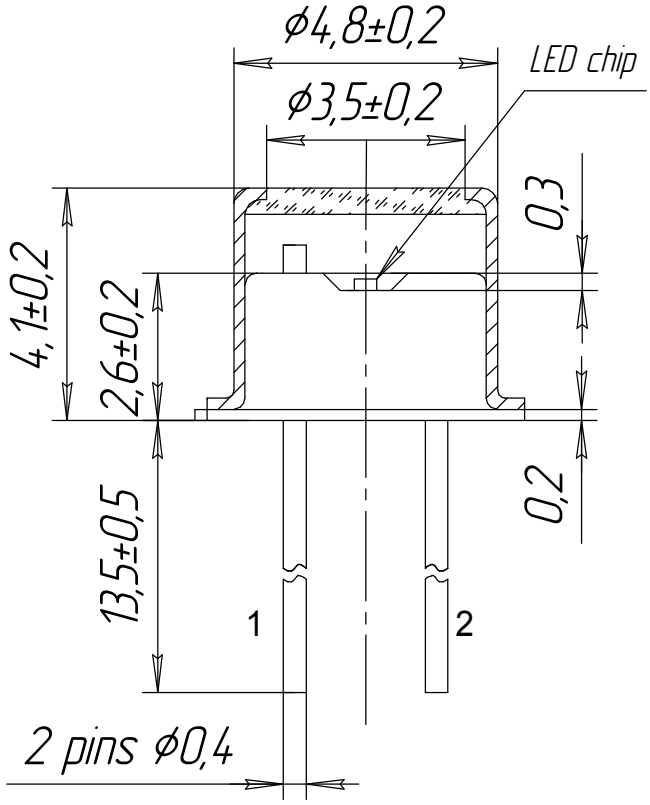

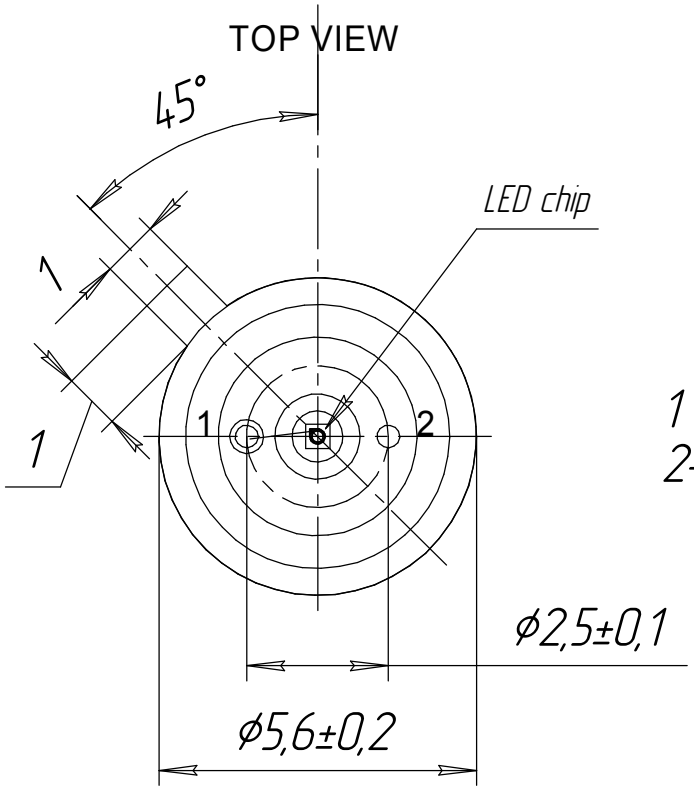

1 – LED cathode
2– LED anode